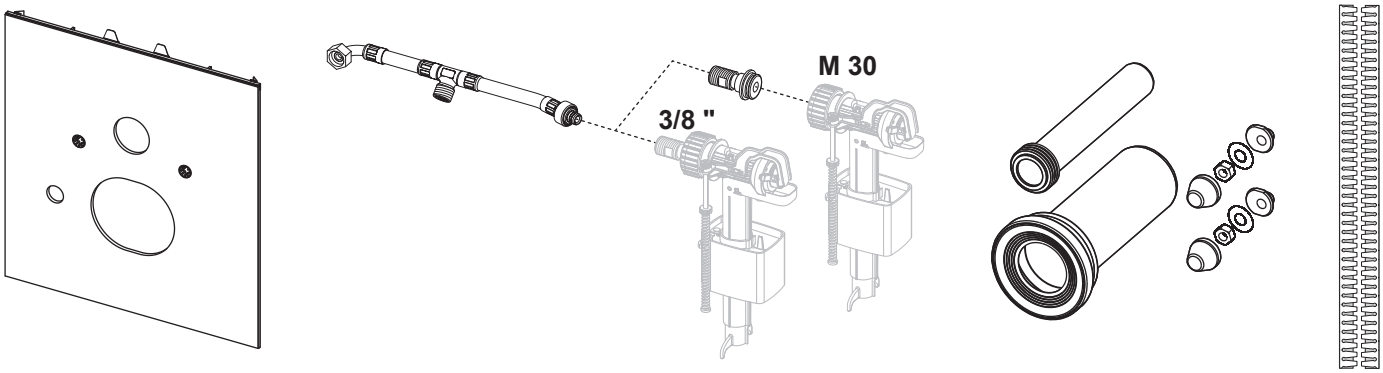

Geberit
AquaClean Sela, Mera

V & B
ViClean U+

TOTO
Washlet SG
Washlet EK, GL

Grohe
Sensia

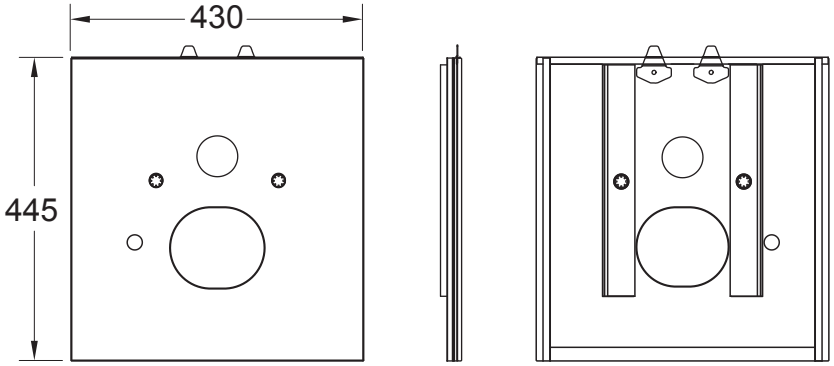

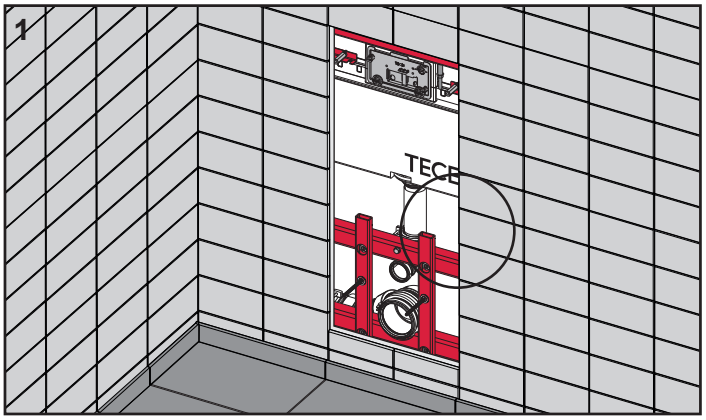

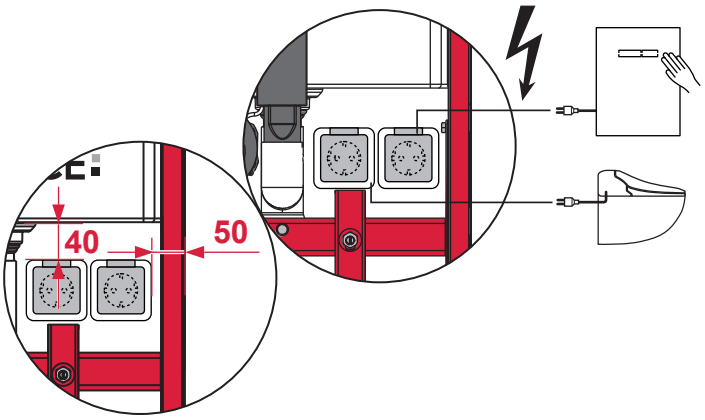

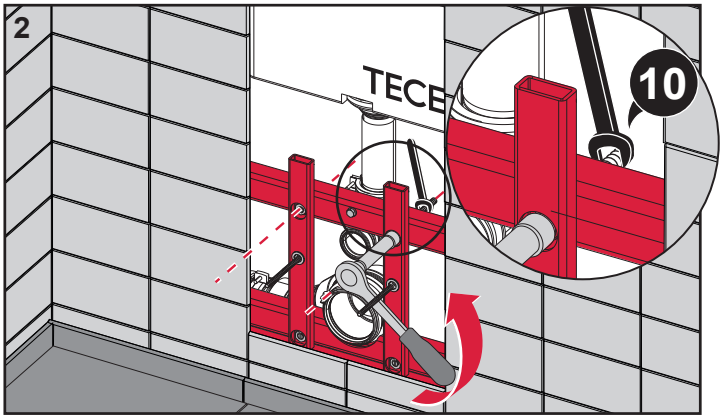

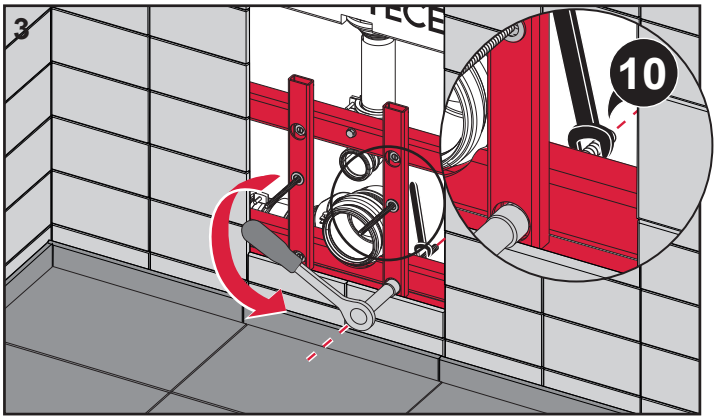

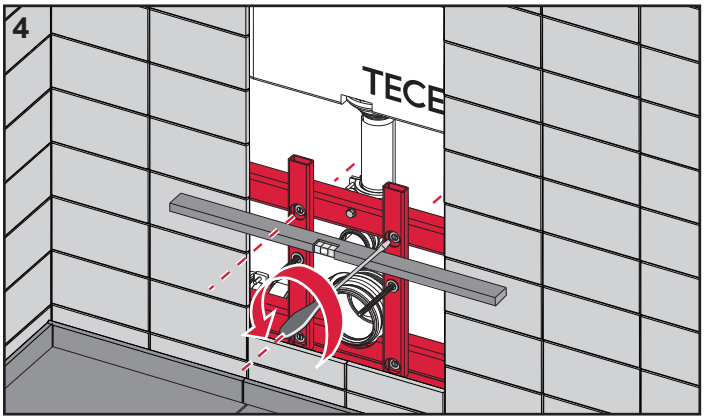
4
TECE

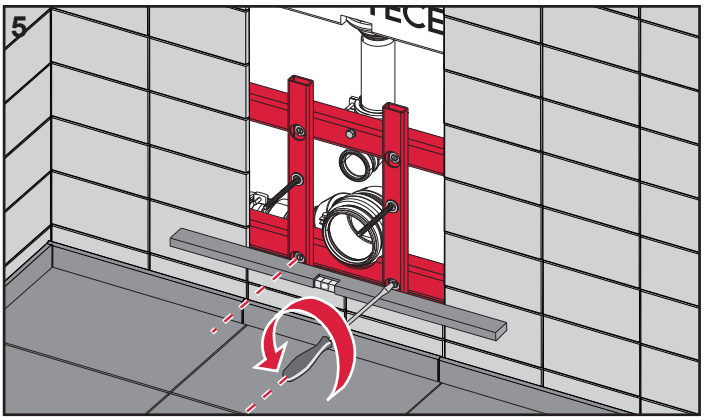
5

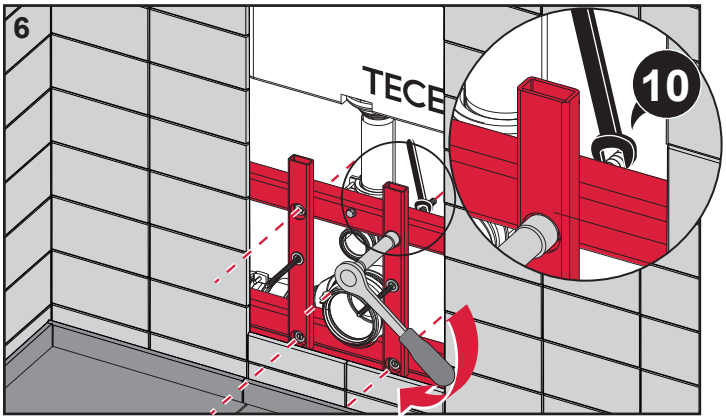
6
TECE
10

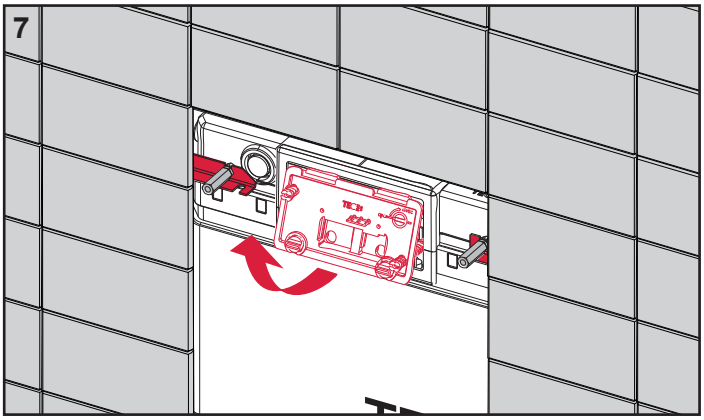
7

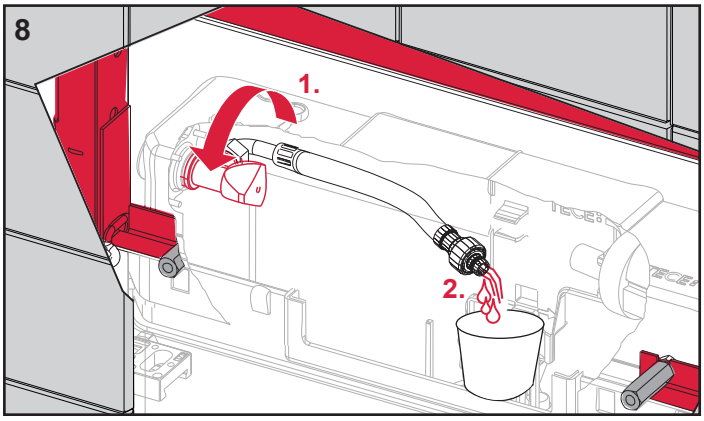
8
1.
2.

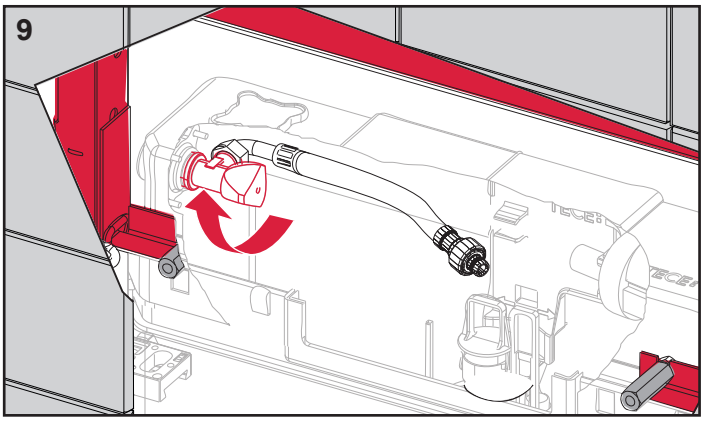
9

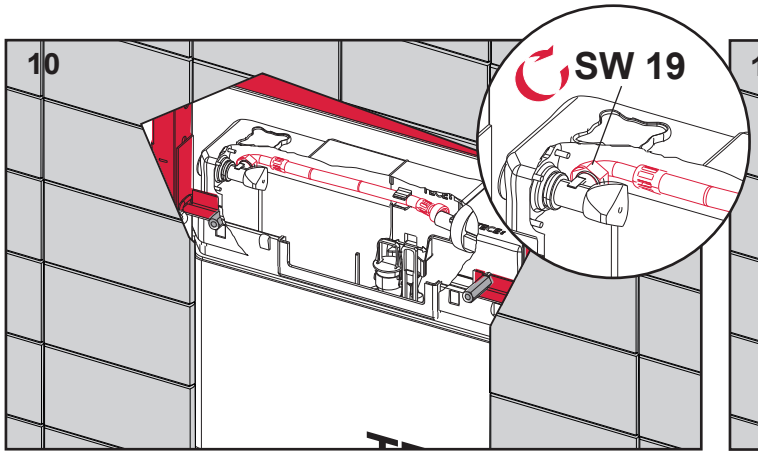
10
SW 19

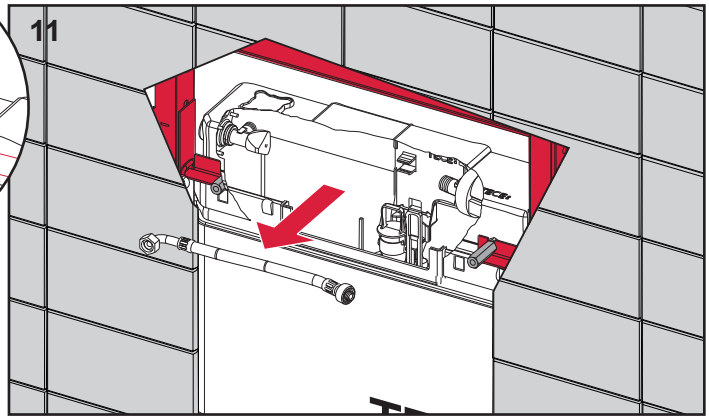
11

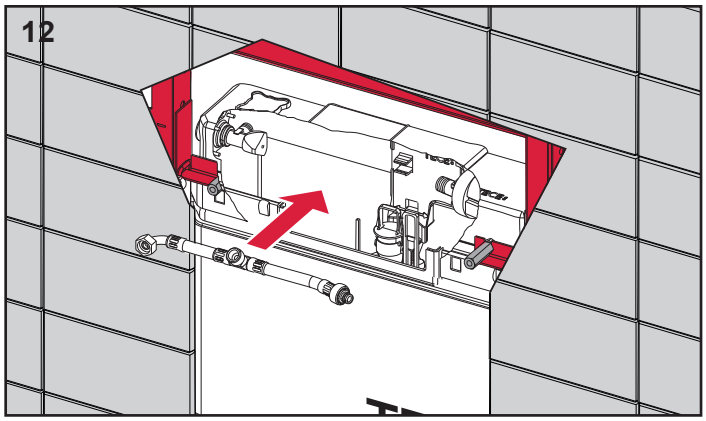
12

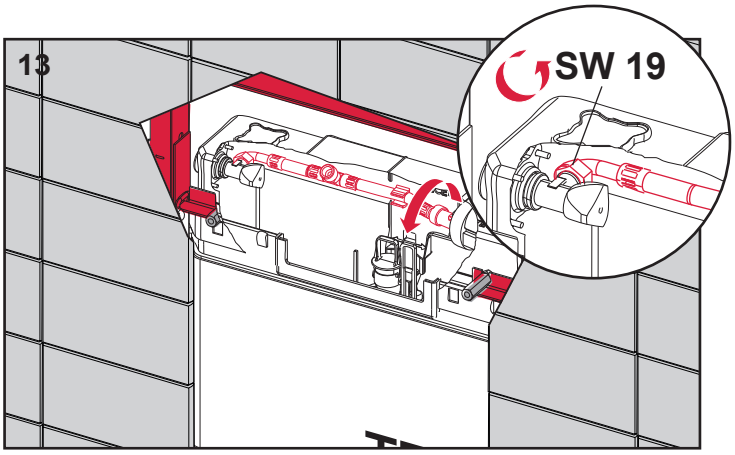
13
SW 19

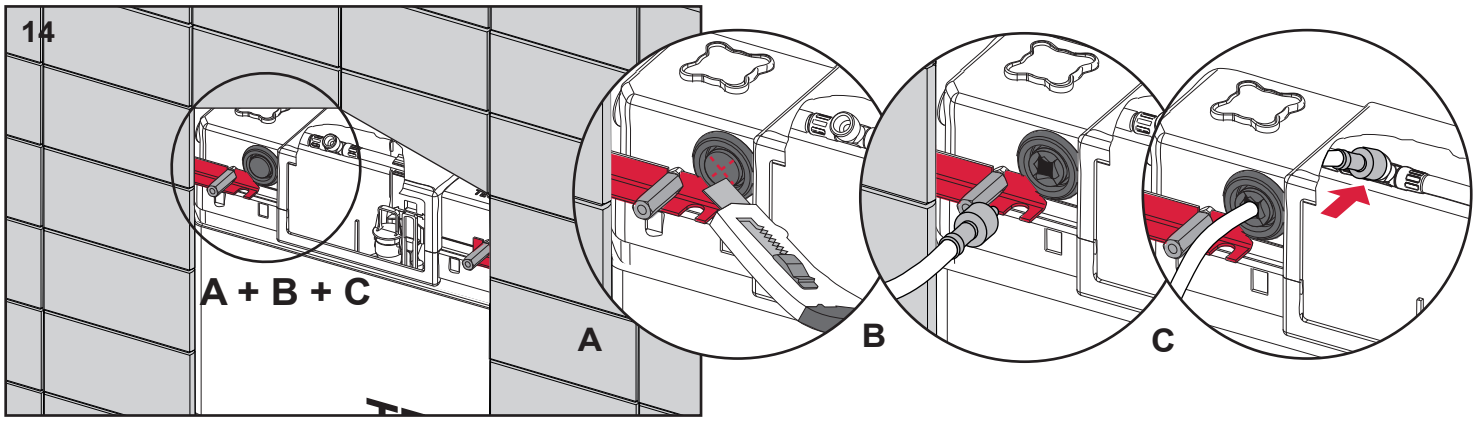
14
A + B + C
A
B
C

15

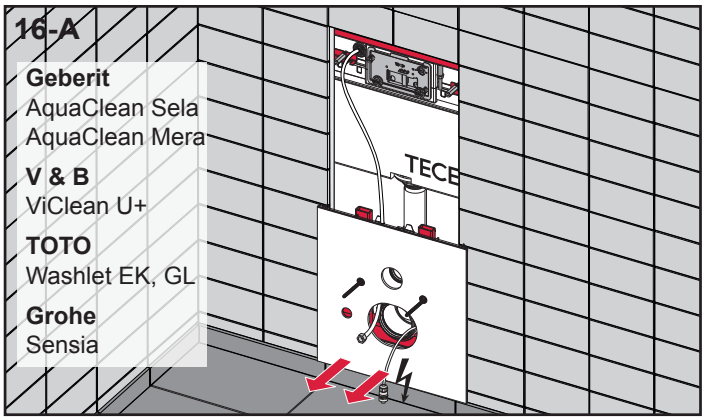
16-A
Geberit
AquaClean Sela
AquaClean Mera
V & B
ViClean U+
TOTO
Washlet EK, GL
Grohe
Sensia
TECE

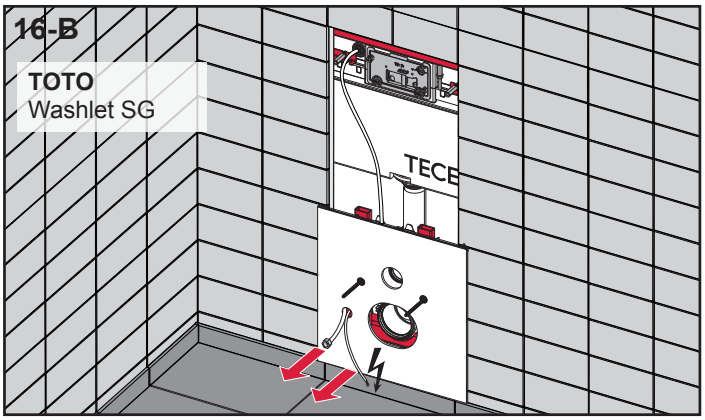
16-B
TOTO
Washlet SG
TECE

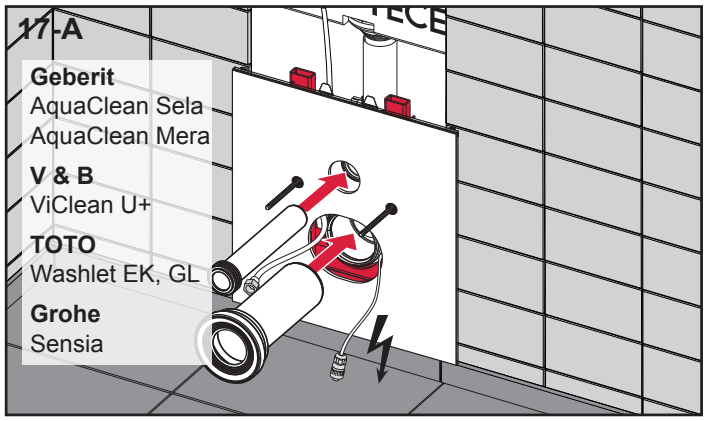

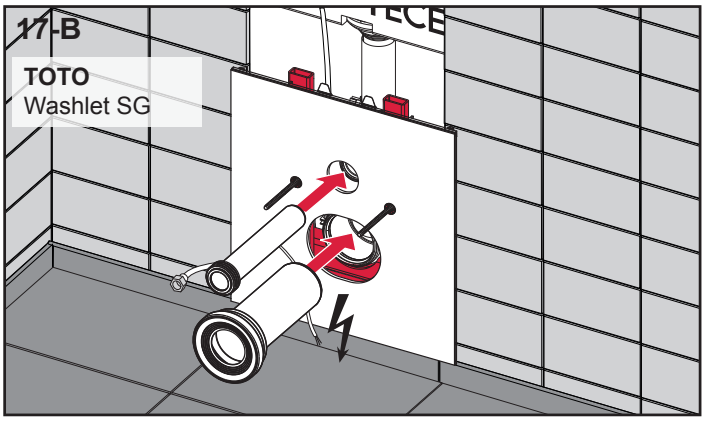

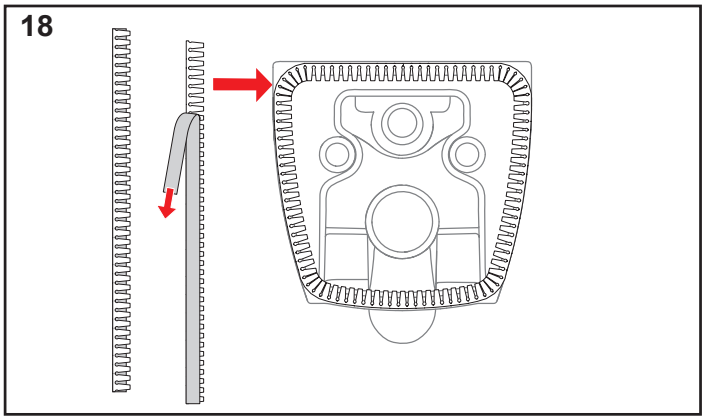

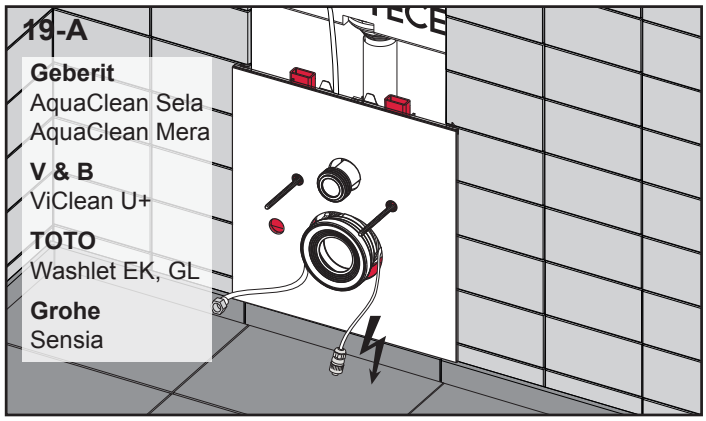

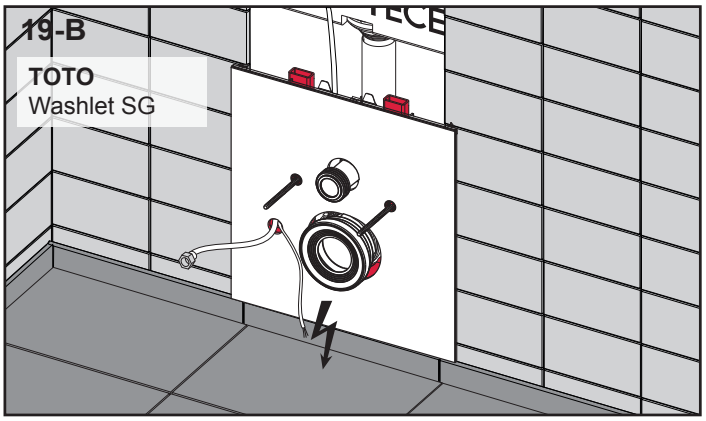

SP430 069 00 e